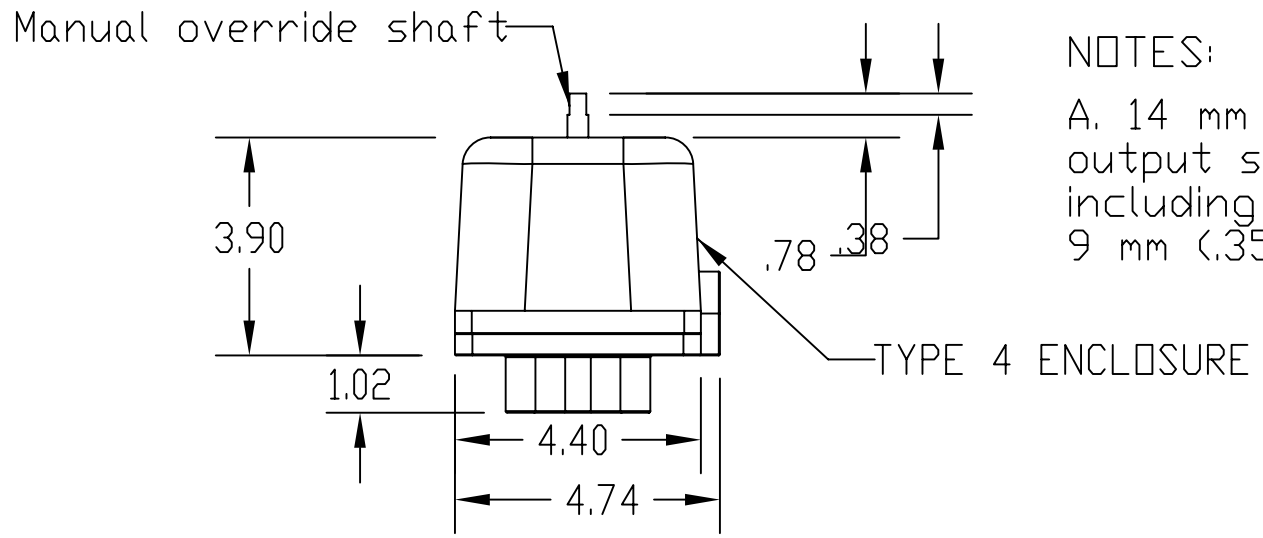

NOTES:

A. 14 mm (.551") square female X .62 deep output standard. Other configurations including 14 mm (.551") square male and 9 mm (.355") square female also available

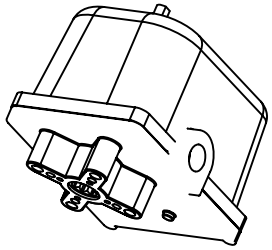

SCALE 0.200

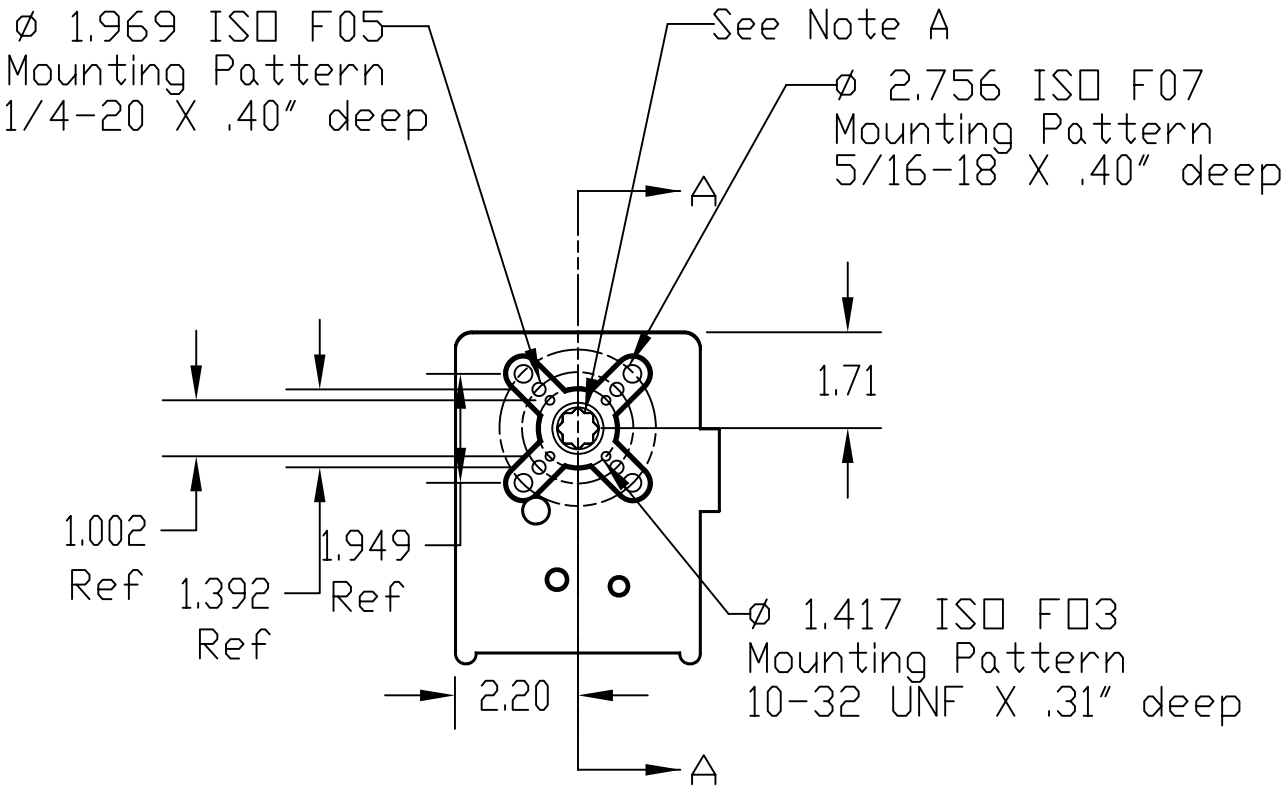

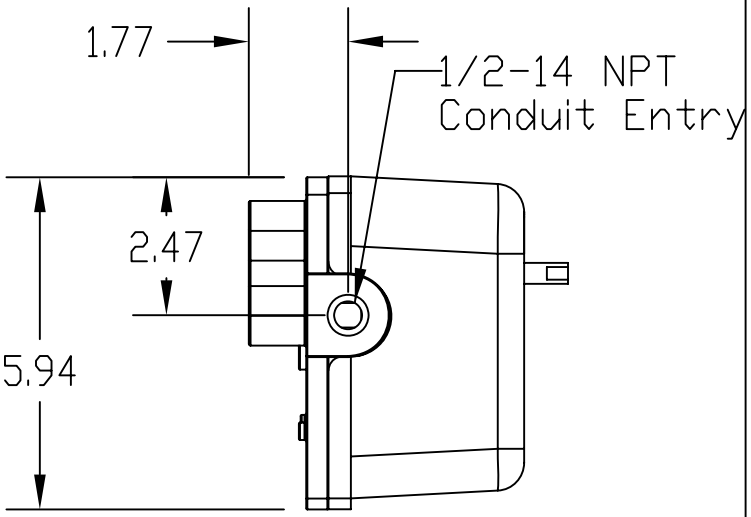

Model RA, Female
Installation dimensions
ENGLISH UNITS

REX ENGINEERING CORP
1200 Chaffee Drive
Titusville, FL 32780
321-268-5500
WWW.REX-ENGINEERING.COM